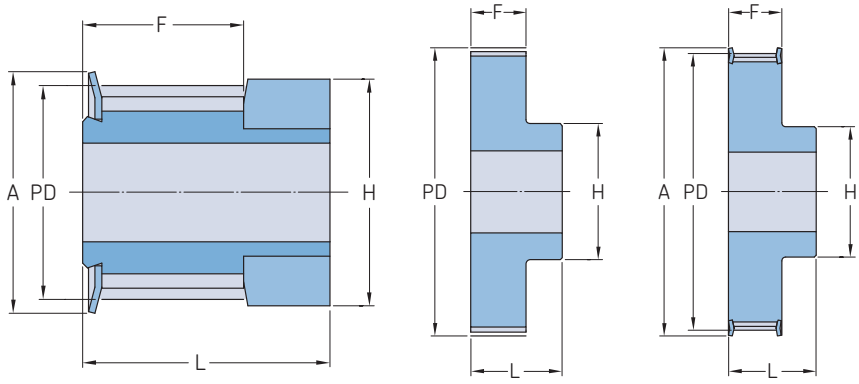

Type 0F Type 1 Type 1F

Pitch	Belt width	Pitch diameter PD	Number of teeth	Pulley type	Dimensions Outer diameter OD	A	B Min.	B Max.	F	K	L	M	H	Mass	Designation
mm			–	–	mm									kg	–
3	**09**	9,55	10	0F	8,79	13,0	–	4,0	10,2	–	17,5	–	13,0	0,04	**PHP 10-3M-09RSB**
		11,46	12	0F	10,70	15,0	–	6,0	10,2	–	17,5	–	15,0	0,06	**PHP 12-3M-09RSB**
		13,37	14	0F	12,61	16,0	–	7,0	10,2	–	17,5	–	16,0	0,07	**PHP 14-3M-09RSB**
		14,32	15	0F	13,56	17,5	–	8,0	10,2	–	17,5	–	17,5	0,08	**PHP 15-3M-09RSB**
		15,28	16	1F	14,52	18,0	4	6,0	12,8	–	20,6	–	10,0	0,07	**PHP 16-3M-09RSB**
		17,19	18	1F	16,43	19,5	6	6,5	12,8	–	20,6	–	11,0	0,08	**PHP 18-3M-09RSB**
		19,10	20	1F	18,34	23,0	6	8,0	12,8	–	20,6	–	13,0	0,01	**PHP 20-3M-09RSB**
		20,05	21	1F	19,29	25,0	6	8,5	12,8	–	20,6	–	14,0	0,01	**PHP 21-3M-09RSB**
		21,01	22	1F	20,25	25,0	6	8,5	12,8	–	20,6	–	14,0	0,01	**PHP 22-3M-09RSB**
		22,92	24	1F	22,16	25,0	6	8,5	12,8	–	20,6	–	14,0	0,02	**PHP 24-3M-09RSB**
		24,83	26	1F	24,07	28,0	6	10,5	12,8	–	20,6	–	16,0	0,02	**PHP 26-3M-09RSB**
		26,74	28	1F	25,98	32,0	6	11,5	12,8	–	20,6	–	18,0	0,02	**PHP 28-3M-09RSB**
		28,65	30	1F	27,89	32,0	6	12,5	12,8	–	20,6	–	20,0	0,03	**PHP 30-3M-09RSB**
		30,56	32	1F	29,80	36,0	6	14,0	12,8	–	20,6	–	22,0	0,03	**PHP 32-3M-09RSB**
		34,38	36	1F	33,62	38,0	6	17,0	13,4	–	22,2	–	26,0	0,05	**PHP 36-3M-09RSB**
		38,20	40	1F	37,44	42,0	6	19,0	13,4	–	22,2	–	28,0	0,06	**PHP 40-3M-09RSB**
		42,02	44	1F	41,26	48,0	6	22,5	13,4	–	22,2	–	33,0	0,07	**PHP 44-3M-09RSB**
		45,84	48	1	45,08	–	8	22,5	13,4	–	22,2	–	33,0	0,07	**PHP 48-3M-09RSB**
		57,30	60	1	56,54	–	8	22,5	13,4	–	22,2	–	33,0	0,11	**PHP 60-3M-09RSB**
		68,75	72	1	67,99	–	8	22,5	13,4	–	22,2	–	33,0	0,14	**PHP 72-3M-09RSB**
3	**15**	9,55	10	0F	8,79	13,0	–	3,0	17,0	–	26,0	–	13,0	0,04	**PHP 10-3M-15RSB**
		11,46	12	0F	10,70	15,0	–	5,0	17,0	–	26,0	–	15,0	0,06	**PHP 12-3M-15RSB**
		13,37	14	0F	12,61	16,0	–	6,0	17,0	–	26,0	–	16,0	0,07	**PHP 14-3M-15RSB**
		14,32	15	0F	13,56	17,5	–	6,0	17,0	–	26,0	–	17,5	0,08	**PHP 15-3M-15RSB**
		15,28	16	1F	14,52	18,0	4	7,0	19,5	–	26,0	–	10,0	0,07	**PHP 16-3M-15RSB**
		17,19	18	1F	16,43	19,5	6	8,0	19,5	–	26,0	–	11,0	0,08	**PHP 18-3M-15RSB**
		19,10	20	1F	18,34	23,0	6	9,0	19,5	–	26,0	–	13,0	0,01	**PHP 20-3M-15RSB**
		20,05	21	1F	19,29	25,0	6	9,0	19,5	–	26,0	–	14,0	0,01	**PHP 21-3M-15RSB**
		21,01	22	1F	20,25	25,0	6	9,0	19,5	–	26,0	–	14,0	0,01	**PHP 22-3M-15RSB**
		22,92	24	1F	22,16	25,0	6	9,0	19,5	–	26,0	–	14,0	0,02	**PHP 24-3M-15RSB**
		24,83	26	1F	24,07	28,0	6	11,0	19,5	–	26,0	–	16,0	0,02	**PHP 26-3M-15RSB**
		26,74	28	1F	25,98	32,0	6	12,0	19,5	–	26,0	–	18,0	0,02	**PHP 28-3M-15RSB**
		28,65	30	1F	27,89	32,0	6	14,0	19,5	–	26,0	–	20,0	0,03	**PHP 30-3M-15RSB**
		30,56	32	1F	29,80	36,0	6	15,0	19,5	–	26,0	–	22,0	0,03	**PHP 32-3M-15RSB**
		34,38	36	1F	33,62	38,0	6	16,0	20,0	–	30,0	–	26,0	0,05	**PHP 36-3M-15RSB**
		38,20	40	1F	37,44	42,0	6	18,0	20,0	–	30,0	–	28,0	0,06	**PHP 40-3M-15RSB**
		42,02	44	1F	41,26	48,0	6	20,0	20,0	–	30,0	–	33,0	0,07	**PHP 44-3M-15RSB**
		45,84	48	1	45,08	–	8	20,0	20,0	–	30,0	–	33,0	0,07	**PHP 48-3M-15RSB**
		57,30	60	1	56,54	–	8	20,0	20,0	–	30,0	–	33,0	0,11	**PHP 60-3M-15RSB**
		68,75	72	1	67,99	–	8	20,0	20,0	–	30,0	–	33,0	0,14	**PHP 72-3M-15RSB**
5	**09**	19,10	12	1F	17,96	25,0	4	8,0	14,5	–	20,0	–	13,0	0,03	**PHP 12-5M-09RSB**
		22,28	14	1F	21,14	25,0	6	9,0	14,5	–	20,0	–	13,0	0,03	**PHP 14-5M-09RSB**
		23,87	15	1F	22,73	28,0	6	11,0	14,5	–	20,0	–	16,0	0,04	**PHP 15-5M-09RSB**
		25,46	16	1F	24,32	28,0	6	11,0	14,5	–	20,0	–	16,0	0,05	**PHP 16-5M-09RSB**
		28,65	18	1F	27,51	32,0	6	13,0	14,5	–	20,0	–	19,0	0,07	**PHP 18-5M-09RSB**
		31,83	20	1F	30,69	36,0	6	14,0	14,5	–	22,5	–	23,0	0,09	**PHP 20-5M-09RSB**
		33,42	21	1F	32,28	38,0	6	15,0	14,5	–	22,5	–	24,0	0,11	**PHP 21-5M-09RSB**
		35,01	22	1F	33,87	38,0	6	16,0	14,5	–	22,5	–	25,5	0,12	**PHP 22-5M-09RSB**
		38,20	24	1F	37,06	42,0	6	18,0	14,5	–	22,5	–	27,0	0,15	**PHP 24-5M-09RSB**
		41,38	26	1F	40,24	44,0	6	20,0	14,5	–	22,5	–	30,0	0,17	**PHP 26-5M-09RSB**
		44,56	28	1F	43,42	48,0	6	20,0	14,5	–	22,5	–	30,5	0,20	**PHP 28-5M-09RSB**
		47,75	30	1F	46,60	51,0	6	24,0	14,5	–	22,5	–	35,0	0,24	**PHP 30-5M-09RSB**
		50,93	32	1F	49,79	54,0	8	26,0	14,5	–	22,5	–	38,0	0,27	**PHP 32-5M-09RSB**
		57,30	36	1F	56,16	60,0	8	26,0	14,5	–	22,5	–	38,0	0,32	**PHP 36-5M-09RSB**

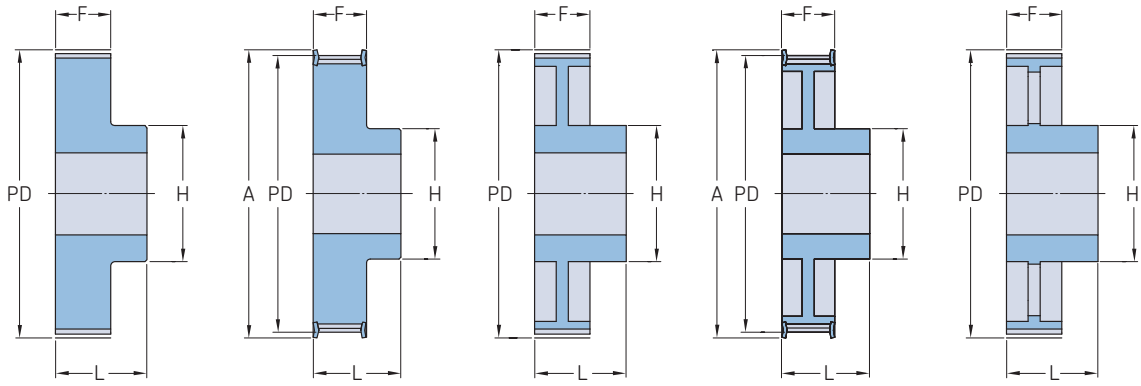

Type 1 Type 1F Type 2 Type 2F Type 5

Pitch	Belt width	Pitch diameter PD	Number of teeth	Pulley type	Dimensions Outer diameter OD	A	B Min.	B Max.	F	K	L	M	H	Mass	Designation
mm			–	–	mm									kg	–
5	**09**	63,66	40	1F	62,52	71,0	8	26,0	14,5	–	22,5	–	38,0	0,40	**PHP 40-5M-09RSB**
		70,03	44	2	68,89	–	8	26,0	14,5	–	25,5	–	38,0	0,17	**PHP 44-5M-09RSB**
		76,39	48	2	75,25	–	8	26,0	14,5	–	25,5	–	38,0	0,18	**PHP 48-5M-09RSB**
		95,49	60	2	94,35	–	8	30,0	14,5	–	25,5	–	45,0	0,23	**PHP 60-5M-09RSB**
		114,59	72	2	113,45	–	8	30,0	14,5	–	25,5	–	45,0	0,27	**PHP 72-5M-09RSB**
5	**15**	19,10	12	1F	17,96	25,0	4	8,0	20,5	–	26,0	–	13,0	0,03	**PHP 12-5M-15RSB**
		22,28	14	1F	21,14	25,0	6	9,0	20,5	–	26,0	–	13,0	0,05	**PHP 14-5M-15RSB**
		23,87	15	1F	22,73	28,0	6	11,0	20,5	–	26,0	–	16,0	0,06	**PHP 15-5M-15RSB**
		25,46	16	1F	24,32	28,0	6	11,0	20,5	–	26,0	–	16,0	0,06	**PHP 16-5M-15RSB**
		28,65	18	1F	27,51	32,0	6	13,0	20,5	–	26,0	–	19,0	0,09	**PHP 18-5M-15RSB**
		31,83	20	1F	30,69	36,0	6	14,0	20,5	–	26,0	–	23,0	0,11	**PHP 20-5M-15RSB**
		33,42	21	1F	32,28	38,0	6	15,0	20,5	–	26,0	–	24,0	0,13	**PHP 21-5M-15RSB**
		35,01	22	1F	33,87	38,0	6	16,0	20,5	–	26,0	–	25,5	0,14	**PHP 22-5M-15RSB**
		38,20	24	1F	37,06	42,0	6	18,0	20,5	–	28,0	–	27,0	0,18	**PHP 24-5M-15RSB**
		41,38	26	1F	40,24	44,0	6	20,0	20,5	–	28,0	–	30,0	0,22	**PHP 26-5M-15RSB**
		44,56	28	1F	43,42	48,0	6	20,0	20,5	–	28,0	–	30,5	0,25	**PHP 28-5M-15RSB**
		47,75	30	1F	46,60	51,0	6	24,0	20,5	–	28,0	–	35,0	0,30	**PHP 30-5M-15RSB**
		50,93	32	1F	49,79	54,0	8	26,0	20,5	–	28,0	–	38,0	0,35	**PHP 32-5M-15RSB**
		57,30	36	1F	56,16	60,0	8	26,0	20,5	–	28,0	–	38,0	0,52	**PHP 36-5M-15RSB**
		63,66	40	1F	62,52	71,0	8	26,0	20,5	–	28,0	–	38,0	0,43	**PHP 40-5M-15RSB**
		70,03	44	2	68,89	–	8	26,0	20,5	–	30,0	–	38,0	0,23	**PHP 44-5M-15RSB**
		76,39	48	2	75,25	–	8	26,0	20,5	–	30,0	–	38,0	0,19	**PHP 48-5M-15RSB**
		95,49	60	2	94,35	–	8	34,0	20,5	–	30,0	–	50,0	0,31	**PHP 60-5M-15RSB**
		114,59	72	2	113,45	–	8	34,0	20,5	–	30,0	–	50,0	0,38	**PHP 72-5M-15RSB**
5	**25**	19,10	12	1F	17,96	25,0	4	8,0	30,5	–	36,0	5,5	13,0	0,05	**PHP 12-5M-25RSB**
		22,28	14	1F	21,14	25,0	6	9,0	30,5	–	36,0	5,5	13,0	0,07	**PHP 14-5M-25RSB**
		23,87	15	1F	22,73	28,0	6	11,0	30,5	–	36,0	5,5	16,0	0,08	**PHP 15-5M-25RSB**
		25,46	16	1F	24,32	28,0	6	11,0	30,5	–	36,0	5,5	16,0	0,10	**PHP 16-5M-25RSB**
		28,65	18	1F	27,51	32,0	6	13,0	30,5	–	36,0	5,5	19,0	0,12	**PHP 18-5M-25RSB**
		31,83	20	1F	30,69	36,0	6	14,0	30,5	–	36,0	5,5	23,0	0,16	**PHP 20-5M-25RSB**
		33,42	21	1F	32,28	38,0	6	15,0	30,5	–	38,0	7,5	24,0	0,19	**PHP 21-5M-25RSB**
		35,01	22	1F	33,87	38,0	6	16,0	30,5	–	38,0	7,5	25,5	0,21	**PHP 22-5M-25RSB**
		38,20	24	1F	37,06	42,0	6	18,0	30,5	–	38,0	7,5	27,0	0,25	**PHP 24-5M-25RSB**
		41,38	26	1F	40,24	44,0	6	20,0	30,5	–	38,0	7,5	30,0	0,30	**PHP 26-5M-25RSB**
		44,56	28	1F	43,42	48,0	6	20,0	30,5	–	38,0	7,5	30,5	0,35	**PHP 28-5M-25RSB**
		47,75	30	1F	46,60	51,0	6	24,0	30,5	–	38,0	7,5	35,0	0,42	**PHP 30-5M-25RSB**
		50,93	32	1F	49,79	54,0	8	26,0	30,5	–	38,0	7,5	38,0	0,48	**PHP 32-5M-25RSB**
		57,30	36	1F	56,16	60,0	8	26,0	30,5	–	38,0	7,5	38,0	0,59	**PHP 36-5M-25RSB**
		63,66	40	1F	62,52	71,0	8	26,0	30,5	–	38,0	7,5	38,0	0,74	**PHP 40-5M-25RSB**
		70,03	44	2	68,89	–	8	26,0	30,5	–	40,0	9,5	38,0	0,32	**PHP 44-5M-25RSB**
		76,39	48	2	72,25	–	8	26,0	30,5	–	40,0	9,5	38,0	0,28	**PHP 48-5M-25RSB**
		95,49	60	2	94,35	–	8	34,0	30,5	–	40,0	9,5	50,0	0,44	**PHP 60-5M-25RSB**
		114,59	72	2	113,45	–	8	34,0	30,5	–	40,0	9,5	50,0	0,53	**PHP 72-5M-25RSB**
		127,32	80	1	126,18	–	8	62,0	30,5	–	40,0	–	92,0	0,60	**PHP 80-5M-25RSB**
8	**20**	50,93	20	1F	49,56	60,0	12	25,0	28,0	–	38,0	–	38,0	0,43	**PHP 20-8M-20RSB**
		53,47	21	1F	52,10	62,0	12	27,0	28,0	–	38,0	–	40,0	0,49	**PHP 21-8M-20RSB**
		56,02	22	1F	54,65	65,0	12	29,0	28,0	–	38,0	–	43,0	0,54	**PHP 22-8M-20RSB**
		58,57	23	1F	57,20	65,0	12	29,0	28,0	–	38,0	–	45,0	0,60	**PHP 23-8M-20RSB**
		61,12	24	1F	59,75	70,0	12	30,0	28,0	–	38,0	–	45,0	0,65	**PHP 24-8M-20RSB**
		63,66	25	1F	62,28	71,0	12	31,0	28,0	–	38,0	–	45,0	0,73	**PHP 25-8M-20RSB**
		66,21	26	1F	64,84	75,0	12	32,0	28,0	–	38,0	–	50,0	0,80	**PHP 26-8M-20RSB**
		68,75	27	1F	67,39	75,0	12	33,0	28,0	–	38,0	–	50,0	0,84	**PHP 27-8M-20RSB**
		71,30	28	1F	70,08	80,0	15	34,0	28,0	–	38,0	–	50,0	0,87	**PHP 28-8M-20RSB**
		73,85	29	1F	72,62	85,0	15	35,0	28,0	–	38,0	–	55,0	0,95	**PHP 29-8M-20RSB**

Pitch	Belt width	Pitch diameter	Number of teeth	Pulley type	Dimensions Outer diameter									Mass	Designation
		PD			OD	A	B Min.	Max.	F	K	L	M	H		
mm			–	–	mm									kg	–
8	**20**	76,39	30	1F	75,13	85,0	15	36,0	28,0	–	38,0	–	55,0	1,02	**PHP 30-8M-20RSB**
		78,94	31	1F	77,65	87,0	15	38,0	28,0	–	38,0	–	55,0	1,11	**PHP 31-8M-20RSB**
		81,49	32	1F	80,16	90,0	15	40,0	28,0	–	38,0	–	60,0	1,20	**PHP 32-8M-20RSB**
		84,03	33	1F	82,68	90,0	15	42,0	28,0	–	38,0	–	60,0	1,30	**PHP 33-8M-20RSB**
		86,58	34	1F	85,22	95,0	15	44,0	28,0	–	38,0	–	70,0	1,40	**PHP 34-8M-20RSB**
		89,13	35	1F	87,76	95,0	15	45,0	28,0	–	38,0	–	70,0	1,48	**PHP 35-8M-20RSB**
		91,67	36	1F	90,30	100,0	15	46,0	28,0	–	38,0	–	70,0	1,55	**PHP 36-8M-20RSB**
		96,77	38	1F	95,39	105,0	15	50,0	28,0	–	38,0	–	75,0	1,65	**PHP 38-8M-20RSB**
		101,86	40	1F	100,49	110,0	15	50,0	28,0	–	38,0	–	75,0	1,74	**PHP 40-8M-20RSB**
		106,95	42	1F	105,58	111,0	15	50,0	28,0	–	38,0	–	75,0	1,92	**PHP 42-8M-20RSB**
		112,05	44	1F	110,67	121,0	15	50,0	28,0	–	38,0	–	75,0	2,10	**PHP 44-8M-20RSB**
		114,59	45	1F	113,22	121,0	15	50,0	28,0	–	38,0	–	75,0	2,19	**PHP 45-8M-20RSB**
		122,23	48	1F	120,86	131,0	15	54,0	28,0	–	38,0	–	75,0	2,44	**PHP 48-8M-20RSB**
		127,32	50	1F	125,95	131,0	15	54,0	28,0	–	38,0	–	75,0	2,48	**PHP 50-8M-20RSB**
		132,42	52	1F	131,05	140,0	15	54,0	28,0	–	38,0	–	80,0	2,52	**PHP 52-8M-20RSB**
		142,60	56	2F	141,23	151,0	15	54,0	28,0	–	38,0	–	80,0	2,60	**PHP 56-8M-20RSB**
		162,97	64	2F	161,60	172,0	15	54,0	28,0	–	38,0	–	80,0	2,90	**PHP 64-8M-20RSB**
		183,35	72	2F	181,97	192,0	15	54,0	28,0	–	38,0	–	80,0	3,10	**PHP 72-8M-20RSB**
		203,72	80	2	202,35	–	15	54,0	28,0	–	38,0	–	90,0	3,80	**PHP 80-8M-20RSB**
		229,18	90	2	227,81	–	15	54,0	28,0	–	38,0	–	90,0	4,20	**PHP 90-8M-20RSB**
		285,21	112	5	283,83	–	18	54,0	28,0	–	38,0	–	90,0	5,20	**PHP 112-8M-20RSB**
		366,69	144	5	365,32	–	20	54,0	28,0	–	38,0	–	90,0	7,50	**PHP 144-8M-20RSB**
		427,81	168	5	426,44	–	20	60,0	28,0	–	38,0	–	100,0	10,00	**PHP 168-8M-20RSB**
		488,92	192	5	487,55	–	20	60,0	28,0	–	38,0	–	100,0	14,40	**PHP 192-8M-20RSB**
8	**30**	50,93	20	1F	49,56	60,0	12	25,0	38,0	–	48,0	–	38,0	0,54	**PHP 20-8M-30RSB**
		53,47	21	1F	52,10	62,0	12	27,0	38,0	–	48,0	–	40,0	0,62	**PHP 21-8M-30RSB**
		56,02	22	1F	54,65	65,0	12	29,0	38,0	–	48,0	–	43,0	0,69	**PHP 22-8M-30RSB**
		57,57	23	1F	57,20	65,0	12	30,0	38,0	–	48,0	–	45,0	0,77	**PHP 23-8M-30RSB**
		61,12	24	1F	59,75	70,0	12	30,0	38,0	–	48,0	–	45,0	0,84	**PHP 24-8M-30RSB**
		63,66	25	1F	62,28	71,0	12	31,0	38,0	–	48,0	–	50,0	0,92	**PHP 25-8M-30RSB**
		66,21	26	1F	64,84	75,0	12	32,0	38,0	–	48,0	–	50,0	1,00	**PHP 26-8M-30RSB**
		68,75	27	1F	67,39	75,0	12	33,0	38,0	–	48,0	–	50,0	1,06	**PHP 27-8M-30RSB**
		71,30	28	1F	70,08	80,0	15	34,0	38,0	–	48,0	–	50,0	1,12	**PHP 28-8M-30RSB**
		76,39	30	1F	75,13	85,0	15	36,0	38,0	–	48,0	–	55,0	1,32	**PHP 30-8M-30RSB**
		78,94	31	1F	77,65	87,0	15	38,0	38,0	–	48,0	–	55,0	1,42	**PHP 31-8M-30RSB**
		81,49	32	1F	80,16	90,0	15	40,0	38,0	–	48,0	–	60,0	1,53	**PHP 32-8M-30RSB**
		84,03	33	1F	82,68	90,0	15	42,0	38,0	–	48,0	–	60,0	1,64	**PHP 33-8M-30RSB**
		86,58	34	1F	85,22	95,0	15	44,0	38,0	–	48,0	–	70,0	1,80	**PHP 34-8M-30RSB**
		89,13	35	1F	87,76	95,0	15	45,0	38,0	–	48,0	–	70,0	1,90	**PHP 35-8M-30RSB**
		91,67	36	1F	90,30	100,0	15	46,0	38,0	–	48,0	–	70,0	1,99	**PHP 36-8M-30RSB**
		96,77	38	1F	95,39	105,0	15	50,0	38,0	–	48,0	–	75,0	2,27	**PHP 38-8M-30RSB**
		101,86	40	1F	100,49	110,0	15	50,0	38,0	–	48,0	–	75,0	2,40	**PHP 40-8M-30RSB**
		106,95	42	1F	105,58	111,0	15	50,0	38,0	–	48,0	–	75,0	2,60	**PHP 42-8M-30RSB**
		112,05	44	1F	110,67	121,0	15	50,0	38,0	–	48,0	–	75,0	2,80	**PHP 44-8M-30RSB**
		114,59	45	1F	113,22	121,0	15	50,0	38,0	–	48,0	–	75,0	2,90	**PHP 45-8M-30RSB**
		122,23	48	1F	120,86	131,0	15	50,0	38,0	–	48,0	–	75,0	3,20	**PHP 48-8M-30RSB**
		127,32	50	1F	125,95	131,0	15	50,0	38,0	–	48,0	–	75,0	3,30	**PHP 50-8M-30RSB**
		132,42	52	1F	131,05	140,0	15	60,0	38,0	–	48,0	–	90,0	3,40	**PHP 52-8M-30RSB**
		142,60	56	2F	141,23	151,0	15	60,0	38,0	–	48,0	–	90,0	3,60	**PHP 56-8M-30RSB**
		152,79	60	2F	151,42	168,0	15	60,0	38,0	–	48,0	–	90,0	3,95	**PHP 60-8M-30RSB**
		162,97	64	2F	161,60	172,0	15	60,0	38,0	–	48,0	–	90,0	4,30	**PHP 64-8M-30RSB**
		183,35	72	2F	181,97	192,0	15	63,0	38,0	–	48,0	–	95,0	4,80	**PHP 72-8M-30RSB**
		203,72	80	2	202,35	–	15	60,0	38,0	–	48,0	–	100,0	5,10	**PHP 80-8M-30RSB**
		229,18	90	2	227,81	–	15	60,0	38,0	–	48,0	–	100,0	5,70	**PHP 90-8M-30RSB**
		285,21	112	5	283,83	–	18	60,0	38,0	–	48,0	–	100,0	6,80	**PHP 112-8M-30RSB**
		366,69	144	5	365,32	–	20	60,0	38,0	–	48,0	–	100,0	9,30	**PHP 144-8M-30RSB**
		427,81	168	5	426,44	–	20	60,0	38,0	–	48,0	–	100,0	11,40	**PHP 168-8M-30RSB**
		488,92	192	5	487,55	–	20	60,0	38,0	–	48,0	–	100,0	16,00	**PHP 192-8M-30RSB**
8	**50**	56,02	22	1F	54,65	65,0	12	29,0	60,0	–	70,0	–	43,0	1,00	**PHP 22-8M-50RSB**
		58,57	23	1F	57,20	65,0	12	30,0	60,0	–	70,0	–	45,0	1,12	**PHP 23-8M-50RSB**
		61,12	24	1F	59,75	70,0	12	30,0	60,0	–	70,0	–	45,0	1,23	**PHP 24-8M-50RSB**
		63,66	25	1F	62,28	70,0	12	34,0	60,0	–	70,0	–	50,0	1,37	**PHP 25-8M-50RSB**
		66,21	26	1F	64,84	75,0	12	34,0	60,0	–	70,0	–	50,0	1,50	**PHP 26-8M-50RSB**
		68,75	27	1F	67,39	75,0	15	34,0	60,0	–	70,0	–	50,0	1,59	**PHP 27-8M-50RSB**
		71,30	28	1F	70,08	80,0	15	34,0	60,0	–	70,0	–	50,0	1,67	**PHP 28-8M-50RSB**
		76,39	30	1F	75,13	85,0	15	38,0	60,0	–	70,0	–	55,0	1,97	**PHP 30-8M-50RSB**
		78,94	31	1F	77,65	87,0	15	38,0	60,0	–	70,0	–	55,0	2,12	**PHP 31-8M-50RSB**
		81,49	32	1F	80,16	90,0	15	40,0	60,0	–	70,0	–	60,0	2,27	**PHP 32-8M-50RSB**
		84,03	33	1F	82,68	90,0	15	42,0	60,0	–	70,0	–	60,0	2,42	**PHP 33-8M-50RSB**
		86,58	34	1F	85,22	95,0	15	44,0	60,0	–	70,0	–	70,0	2,69	**PHP 34-8M-50RSB**
		89,13	35	1F	87,76	95,0	15	45,0	60,0	–	70,0	–	70,0	2,83	**PHP 35-8M-50RSB**
		91,67	36	1F	90,30	100,0	15	46,0	60,0	–	70,0	–	70,0	2,97	**PHP 36-8M-50RSB**
		96,77	38	1F	95,39	105,0	15	50,0	60,0	–	70,0	–	75,0	3,23	**PHP 38-8M-50RSB**

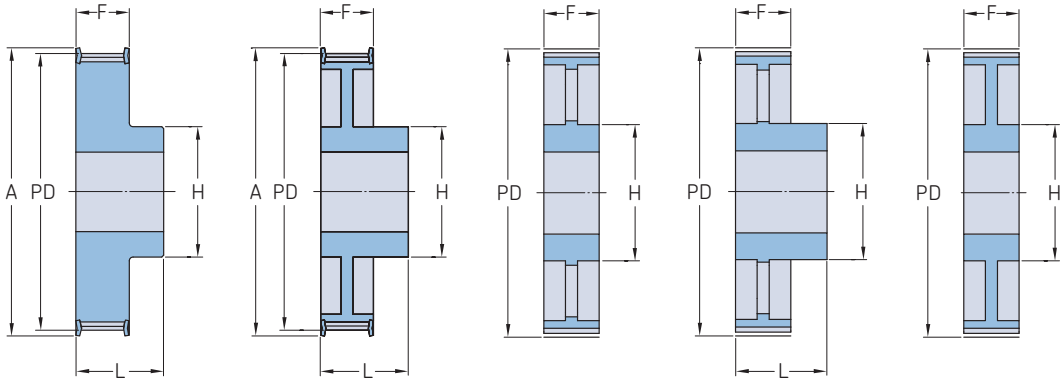

Type 1F Type 2F Type 3 Type 5 Type 7

Pitch	Belt width	Pitch diameter	Number of teeth	Pulley type	Dimensions Outer diameter									Mass	Designation
		PD			OD	A	B Min.	Max.	F	K	L	M	H		
mm			–	–	mm									kg	–
8	**50**	101,86	40	1F	100,49	110,0	18	50,0	60,0	–	70,0	–	75,0	3,50	**PHP 40-8M-50RSB**
		104,41	42	1F	103,03	111,0	18	50,0	60,0	–	70,0	–	75,0	3,70	**PHP 42-8M-50RSB**
		112,05	44	1F	110,67	121,0	18	50,0	60,0	–	70,0	–	75,0	3,90	**PHP 44-8M-50RSB**
		114,59	45	1F	113,22	121,0	18	50,0	60,0	–	70,0	–	75,0	4,00	**PHP 45-8M-50RSB**
		122,23	48	1F	120,86	131,0	18	54,0	60,0	–	70,0	–	80,0	4,30	**PHP 48-8M-50RSB**
		124,78	50	1F	123,41	131,0	18	54,0	60,0	–	70,0	–	80,0	4,48	**PHP 50-8M-50RSB**
		127,32	52	1F	125,95	140,0	18	60,0	60,0	–	70,0	–	90,0	4,65	**PHP 52-8M-50RSB**
		142,60	56	7F	141,23	151,0	18	60,0	60,0	–	60,0	–	90,0	5,00	**PHP 56-8M-50RSB**
		152,79	60	7F	151,42	158,0	18	60,0	60,0	–	60,0	–	90,0	5,30	**PHP 60-8M-50RSB**
		162,97	64	7F	161,60	171,0	18	60,0	60,0	–	60,0	–	100,0	5,60	**PHP 64-8M-50RSB**
		183,35	72	7F	181,97	192,0	18	63,0	60,0	–	60,0	–	100,0	6,80	**PHP 72-8M-50RSB**
		203,72	80	7	202,35	–	18	60,0	60,0	–	60,0	–	110,0	6,90	**PHP 80-8M-50RSB**
		229,18	90	7	227,81	–	18	60,0	60,0	–	60,0	–	110,0	8,60	**PHP 90-8M-50RSB**
		285,21	112	3	283,83	–	20	60,0	60,0	–	60,0	–	110,0	9,60	**PHP 112-8M-50RSB**
		366,69	144	3	365,32	–	20	60,0	60,0	–	60,0	–	110,0	13,80	**PHP 144-8M-50RSB**
		427,81	168	3	426,44	–	20	60,0	60,0	–	60,0	–	120,0	16,00	**PHP 168-8M-50RSB**
		488,92	192	3	487,55	–	20	60,0	60,0	–	60,0	–	130,0	22,40	**PHP 192-8M-50RSB**
8	**85**	56,02	22	1F	54,65	65,0	12	29,0	95,0	–	105,0	–	43,0	1,55	**PHP 22-8M-85RSB**
		58,57	23	1F	57,20	65,0	12	30,0	95,0	–	105,0	–	45,0	1,73	**PHP 23-8M-85RSB**
		61,12	24	1F	59,75	70,0	12	30,0	95,0	–	105,0	–	45,0	1,90	**PHP 24-8M-85RSB**
		63,66	25	1F	62,28	70,0	12	34,0	95,0	–	105,0	–	50,0	2,08	**PHP 25-8M-85RSB**
		66,21	26	1F	64,84	75,0	12	34,0	95,0	–	105,0	–	50,0	2,25	**PHP 26-8M-85RSB**
		68,75	27	1F	67,39	75,0	12	34,0	95,0	–	105,0	–	50,0	2,40	**PHP 27-8M-85RSB**
		71,30	28	1F	70,08	80,0	15	34,0	95,0	–	105,0	–	50,0	2,55	**PHP 28-8M-85RSB**
		76,39	30	1F	75,13	85,0	15	35,0	95,0	–	105,0	–	55,0	3,00	**PHP 30-8M-85RSB**
		78,94	31	1F	77,65	87,0	15	38,0	95,0	–	105,0	–	55,0	3,23	**PHP 31-8M-85RSB**
		81,49	32	1F	80,16	90,0	15	42,0	95,0	–	105,0	–	60,0	3,57	**PHP 32-8M-85RSB**
		84,03	33	1F	82,68	90,0	15	44,0	95,0	–	105,0	–	60,0	3,75	**PHP 33-8M-85RSB**
		86,58	34	1F	85,22	95,0	15	44,0	95,0	–	105,0	–	70,0	4,00	**PHP 34-8M-85RSB**
		89,13	35	1F	87,76	95,0	15	44,0	95,0	–	105,0	–	70,0	4,25	**PHP 35-8M-85RSB**
		91,67	36	1F	90,30	100,0	15	44,0	95,0	–	105,0	–	70,0	4,50	**PHP 36-8M-85RSB**
		96,77	38	1F	95,39	106,0	15	50,0	95,0	–	105,0	–	75,0	4,90	**PHP 38-8M-85RSB**
		101,86	40	1F	100,49	110,0	18	50,0	95,0	–	105,0	–	75,0	5,20	**PHP 40-8M-85RSB**
		106,95	42	1F	105,58	110,0	18	50,0	95,0	–	105,0	–	75,0	6,08	**PHP 42-8M-85RSB**
		112,05	44	1F	110,67	121,0	18	50,0	95,0	–	105,0	–	75,0	6,60	**PHP 44-8M-85RSB**
		114,59	45	1F	113,22	121,0	18	50,0	95,0	–	105,0	–	75,0	6,85	**PHP 45-8M-85RSB**
		122,23	48	1F	120,86	131,0	18	54,0	95,0	–	105,0	–	80,0	7,60	**PHP 48-8M-85RSB**
		127,32	50	1F	125,95	131,0	20	54,0	95,0	–	105,0	–	80,0	8,15	**PHP 50-8M-85RSB**
		132,42	52	1F	131,05	140,0	20	54,0	95,0	–	105,0	–	80,0	8,70	**PHP 52-8M-85RSB**
		142,60	56	1F	141,23	151,0	20	54,0	95,0	–	105,0	–	80,0	9,80	**PHP 56-8M-85RSB**
		152,79	60	7F	151,42	158,0	20	66,0	95,0	–	95,0	–	100,0	10,10	**PHP 60-8M-85RSB**
		162,97	64	7F	161,60	171,0	20	66,0	95,0	–	95,0	–	100,0	10,40	**PHP 64-8M-85RSB**
		183,35	72	7F	181,97	192,0	20	66,0	95,0	–	95,0	–	110,0	11,40	**PHP 72-8M-85RSB**
		203,72	80	3	202,35	–	20	66,0	95,0	–	95,0	–	110,0	11,10	**PHP 80-8M-85RSB**
		229,18	90	3	227,81	–	20	66,0	95,0	–	95,0	–	110,0	13,20	**PHP 90-8M-85RSB**
		285,21	112	3	283,83	–	24	66,0	95,0	–	95,0	–	110,0	16,30	**PHP 112-8M-85RSB**
		366,69	144	3	365,32	–	24	72,0	95,0	–	95,0	–	120,0	21,50	**PHP 144-8M-85RSB**
		427,81	168	3	426,44	–	24	72,0	95,0	–	95,0	–	120,0	26,10	**PHP 168-8M-85RSB**
		488,92	192	3	487,55	–	24	78,0	95,0	–	95,0	–	130,0	30,60	**PHP 192-8M-85RSB**
14	**40**	124,78	28	1F	122,12	127,0	24	67,0	54,0	–	69,0	–	100,0	4,73	**PHP 28-14M-40RSB**
		129,23	29	1F	126,57	138,0	24	67,0	54,0	–	69,0	–	100,0	5,09	**PHP 29-14M-40RSB**
		133,69	30	1F	130,99	138,0	24	67,0	54,0	–	69,0	–	100,0	5,45	**PHP 30-14M-40RSB**
		142,60	32	1F	139,88	154,0	24	67,0	54,0	–	69,0	–	100,0	6,17	**PHP 32-14M-40RSB**

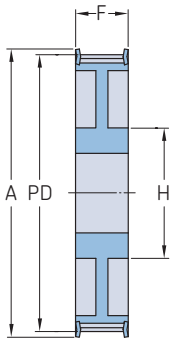

Type 7F

Pitch	Belt width	Pitch diameter	Number of teeth	Pulley type	Dimensions Outer diameter									Mass	Designation
		PD			OD	A	B Min.	Max.	F	K	L	M	H		
mm			–	–	mm									kg	–
14	**40**	151,52	34	1F	148,79	160,0	24	67,0	54,0	–	69,0	–	100,0	6,88	**PHP 34-14M-40RSB**
		160,43	36	1F	157,68	168,0	24	67,0	54,0	–	69,0	–	100,0	7,60	**PHP 36-14M-40RSB**
		169,34	38	1F	166,60	183,0	24	80,0	54,0	–	69,0	–	120,0	8,28	**PHP 38-14M-40RSB**
		178,25	40	1F	175,49	188,0	24	80,0	54,0	–	69,0	–	120,0	9,26	**PHP 40-14M-40RSB**
		196,08	44	1F	193,28	211,0	24	80,0	54,0	–	69,0	–	120,0	10,32	**PHP 44-14M-40RSB**
		213,90	48	2F	211,11	226,0	24	82,0	54,0	–	69,0	–	135,0	11,50	**PHP 48-14M-40RSB**
		249,55	56	2F	246,76	256,0	28	82,0	54,0	–	69,0	–	135,0	13,05	**PHP 56-14M-40RSB**
		285,21	64	2F	282,41	296,0	28	82,0	54,0	–	69,0	–	135,0	14,40	**PHP 64-14M-40RSB**
		320,86	72	5	318,06	–	28	82,0	54,0	–	69,0	–	135,0	16,90	**PHP 72-14M-40RSB**
		356,51	80	5	353,71	–	28	82,0	54,0	–	69,0	–	135,0	18,50	**PHP 80-14M-40RSB**
		401,07	90	5	398,28	–	28	82,0	54,0	–	69,0	–	135,0	20,00	**PHP 90-14M-40RSB**
		499,11	112	5	496,32	–	28	82,0	54,0	–	69,0	–	135,0	26,70	**PHP 112-14M-40RSB**
		641,71	144	5	638,92	–	28	82,0	54,0	–	69,0	–	135,0	35,00	**PHP 144-14M-40RSB**
		748,66	168	5	745,87	–	28	82,0	54,0	–	69,0	–	135,0	44,20	**PHP 168-14M-40RSB**
		855,92	192	5	852,82	–	28	82,0	54,0	–	69,0	–	135,0	52,20	**PHP 192-14M-40RSB**
		962,57	216	5	959,76	–	28	90,0	54,0	–	69,0	–	150,0	60,00	**PHP 216-14M-40RSB**
14	**55**	124,78	28	1F	122,12	127,0	24	67,0	70,0	–	85,0	–	100,0	5,60	**PHP 28-14M-55RSB**
		129,23	29	1F	126,57	138,0	24	67,0	70,0	–	85,0	–	100,0	6,10	**PHP 29-14M-55RSB**
		133,69	30	1F	130,99	138,0	24	67,0	70,0	–	85,0	–	100,0	6,60	**PHP 30-14M-55RSB**
		142,60	32	1F	139,88	154,0	24	67,0	70,0	–	85,0	–	100,0	7,60	**PHP 32-14M-55RSB**
		151,52	34	1F	148,79	160,0	24	67,0	70,0	–	85,0	–	100,0	8,60	**PHP 34-14M-55RSB**
		160,43	36	1F	157,68	168,0	24	67,0	70,0	–	85,0	–	100,0	9,60	**PHP 36-14M-55RSB**
		169,34	38	1F	166,60	183,0	24	80,0	70,0	–	85,0	–	120,0	10,80	**PHP 38-14M-55RSB**
		178,25	40	1F	175,49	188,0	24	80,0	70,0	–	85,0	–	120,0	11,20	**PHP 40-14M-55RSB**
		196,08	44	1F	193,28	211,0	24	80,0	70,0	–	85,0	–	120,0	12,50	**PHP 44-14M-55RSB**
		213,90	48	7F	211,11	226,0	24	82,0	70,0	–	70,0	–	135,0	13,70	**PHP 48-14M-55RSB**
		249,55	56	7F	246,76	256,0	28	82,0	70,0	–	70,0	–	135,0	14,50	**PHP 56-14M-55RSB**
		285,21	64	7F	282,41	296,0	28	82,0	70,0	–	70,0	–	135,0	15,60	**PHP 64-14M-55RSB**
		320,86	72	3	318,06	–	28	82,0	70,0	–	70,0	–	135,0	18,50	**PHP 72-14M-55RSB**
		356,51	80	3	353,71	–	28	82,0	70,0	–	70,0	–	135,0	20,00	**PHP 80-14M-55RSB**
		401,07	90	3	398,28	–	28	82,0	70,0	–	70,0	–	135,0	22,60	**PHP 90-14M-55RSB**
		499,11	112	3	496,32	–	28	82,0	70,0	–	70,0	–	135,0	29,50	**PHP 112-14M-55RSB**
		641,71	144	3	638,92	–	28	82,0	70,0	–	70,0	–	135,0	39,00	**PHP 144-14M-55RSB**
		748,66	168	3	745,87	–	28	82,0	70,0	–	70,0	–	135,0	48,50	**PHP 168-14M-55RSB**
		855,62	192	3	852,82	–	28	82,0	70,0	–	70,0	–	135,0	57,80	**PHP 192-14M-55RSB**
		962,57	216	3	959,76	–	28	82,0	70,0	–	70,0	–	150,0	67,00	**PHP 216-14M-55RSB**
14	**85**	124,78	28	1F	122,12	127,0	24	67,0	102,0	–	117,0	–	100,0	7,70	**PHP 28-14M-85RSB**
		129,23	29	1F	126,57	138,0	24	67,0	102,0	–	117,0	–	100,0	8,40	**PHP 29-14M-85RSB**
		133,69	30	1F	130,99	138,0	24	67,0	102,0	–	117,0	–	100,0	9,10	**PHP 30-14M-85RSB**
		142,60	32	1F	139,88	154,0	24	67,0	102,0	–	117,0	–	100,0	10,50	**PHP 32-14M-85RSB**
		151,52	34	1F	148,79	160,0	24	67,0	102,0	–	117,0	–	100,0	11,90	**PHP 34-14M-85RSB**
		160,43	36	1F	157,68	168,0	32	67,0	102,0	–	117,0	–	100,0	13,20	**PHP 36-14M-85RSB**
		169,34	38	1F	166,60	183,0	32	80,0	102,0	–	117,0	–	120,0	15,15	**PHP 38-14M-85RSB**
		178,25	40	1F	175,49	188,0	32	90,0	102,0	–	117,0	–	135,0	17,10	**PHP 40-14M-85RSB**
		196,08	44	1F	193,28	211,0	32	90,0	102,0	–	117,0	–	135,0	23,30	**PHP 44-14M-85RSB**
		213,90	48	1F	211,11	226,0	32	100,0	102,0	–	117,0	–	150,0	25,00	**PHP 48-14M-85RSB**
		249,55	56	7F	246,76	256,0	32	90,0	102,0	–	102,0	–	150,0	25,00	**PHP 56-14M-85RSB**
		285,21	64	7F	282,41	296,0	32	90,0	102,0	–	102,0	–	150,0	28,20	**PHP 64-14M-85RSB**
		320,86	72	3	318,06	–	32	90,0	102,0	–	102,0	–	150,0	28,80	**PHP 72-14M-85RSB**
		356,51	80	3	353,71	–	32	90,0	102,0	–	102,0	–	150,0	30,10	**PHP 80-14M-85RSB**
		401,07	90	3	398,28	–	32	90,0	102,0	–	102,0	–	150,0	33,00	**PHP 90-14M-85RSB**
		499,11	112	3	496,32	–	32	90,0	102,0	–	102,0	–	150,0	41,80	**PHP 112-14M-85RSB**
		641,71	144	3	638,92	–	32	90,0	102,0	–	102,0	–	150,0	52,40	**PHP 144-14M-85RSB**

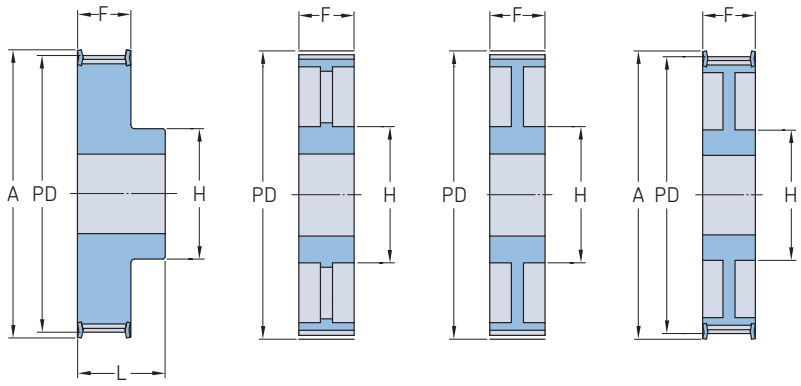

Pitch	Belt width	Pitch diameter PD	Number of teeth	Pulley type	Dimensions Outer diameter OD	A	B Min.	B Max.	F	K	L	M	H	Mass	Designation
mm			–	–	mm									kg	–
14	**85**	748,66	168	3	745,87	–	32	90,0	102,0	–	102,0	–	150,0	60,30	**PHP 168-14M-85RSB**
		855,62	192	3	852,82	–	32	100,0	102,0	–	102,0	–	165,0	70,20	**PHP 192-14M-85RSB**
		962,57	216	3	959,76	–	32	100,0	102,0	–	102,0	–	165,0	81,00	**PHP 216-14M-85RSB**
14	**115**	124,78	28	1F	122,12	127,0	32	67,0	133,0	–	148,0	–	100,0	9,20	**PHP 28-14M-115RSB**
		129,23	29	1F	126,57	138,0	32	67,0	133,0	–	148,0	–	100,0	10,20	**PHP 29-14M-115RSB**
		133,69	30	1F	130,99	138,0	32	67,0	133,0	–	148,0	–	100,0	11,20	**PHP 30-14M-115RSB**
		142,60	32	1F	139,88	154,0	32	67,0	133,0	–	148,0	–	100,0	13,20	**PHP 32-14M-115RSB**
		151,52	34	1F	148,79	160,0	32	67,0	133,0	–	148,0	–	100,0	14,80	**PHP 34-14M-115RSB**
		160,43	36	1F	157,68	168,0	32	80,0	133,0	–	148,0	–	120,0	16,60	**PHP 36-14M-115RSB**
		169,34	38	1F	166,60	183,0	32	80,0	133,0	–	148,0	–	120,0	19,20	**PHP 38-14M-115RSB**
		178,25	40	1F	175,49	188,0	32	90,0	133,0	–	148,0	–	135,0	20,56	**PHP 40-14M-115RSB**
		196,08	44	1F	193,28	211,0	32	94,0	133,0	–	148,0	–	140,0	26,00	**PHP 44-14M-115RSB**
		213,90	48	1F	211,11	226,0	32	100,0	133,0	–	148,0	–	150,0	30,00	**PHP 48-14M-115RSB**
		249,55	56	1F	246,76	256,0	32	100,0	133,0	–	148,0	–	150,0	36,00	**PHP 56-14M-115RSB**
		285,21	64	7F	282,41	296,0	32	90,0	133,0	–	133,0	–	150,0	39,00	**PHP 64-14M-115RSB**
		320,86	72	3	318,06	–	32	90,0	133,0	–	133,0	–	150,0	32,83	**PHP 72-14M-115RSB**
		356,51	80	3	353,71	–	32	90,0	133,0	–	133,0	–	150,0	35,55	**PHP 80-14M-115RSB**
		401,07	90	3	398,28	–	32	90,0	133,0	–	133,0	–	150,0	41,00	**PHP 90-14M-115RSB**
		499,11	112	3	496,32	–	32	90,0	133,0	–	133,0	–	150,0	54,40	**PHP 112-14M-115RSB**
		641,71	144	3	638,92	–	32	100,0	133,0	–	133,0	–	165,0	67,80	**PHP 144-14M-115RSB**
		748,66	168	3	745,87	–	32	100,0	133,0	–	133,0	–	165,0	75,80	**PHP 168-14M-115RSB**
		855,62	192	3	852,82	–	32	100,0	133,0	–	133,0	–	165,0	90,30	**PHP 192-14M-115RSB**
		962,57	216	3	959,76	–	32	100,0	133,0	–	133,0	–	165,0	105,00	**PHP 216-14M-115RSB**
14	**170**	124,78	28	1F	122,12	127,0	32	67,0	187,0	–	202,0	–	100,0	13,80	**PHP 28-14M-170RSB**
		129,23	29	1F	126,57	138,0	32	67,0	187,0	–	202,0	–	100,0	14,20	**PHP 29-14M-170RSB**
		133,69	30	1F	130,99	138,0	32	67,0	187,0	–	202,0	–	100,0	15,60	**PHP 30-14M-170RSB**
		142,60	32	1F	139,88	154,0	32	67,0	187,0	–	202,0	–	100,0	18,10	**PHP 32-14M-170RSB**
		151,52	34	1F	148,79	160,0	32	67,0	187,0	–	202,0	–	100,0	20,40	**PHP 34-14M-170RSB**
		160,43	36	1F	157,68	168,0	32	80,0	187,0	–	202,0	–	120,0	23,50	**PHP 36-14M-170RSB**
		169,34	38	1F	166,60	183,0	32	90,0	187,0	–	202,0	–	135,0	26,50	**PHP 38-14M-170RSB**
		178,25	40	1F	175,49	188,0	32	94,0	187,0	–	202,0	–	140,0	30,10	**PHP 40-14M-170RSB**
		196,08	44	1F	193,28	211,0	32	100,0	187,0	–	202,0	–	160,0	37,80	**PHP 44-14M-170RSB**
		213,90	48	1F	211,11	226,0	32	107,0	187,0	–	202,0	–	160,0	44,50	**PHP 48-14M-170RSB**
		249,55	56	1F	246,76	256,0	32	110,0	187,0	–	202,0	–	160,0	61,00	**PHP 56-14M-170RSB**
		285,21	64	1F	282,41	296,0	32	120,0	187,0	–	202,0	–	180,0	81,00	**PHP 64-14M-170RSB**
		320,86	72	7	318,06	–	32	120,0	187,0	–	187,0	–	180,0	61,40	**PHP 72-14M-170RSB**
		356,51	80	7	353,71	–	32	108,0	187,0	–	187,0	–	180,0	65,00	**PHP 80-14M-170RSB**
		401,07	90	3	398,28	–	38	108,0	187,0	–	187,0	–	180,0	68,00	**PHP 90-14M-170RSB**
		499,11	112	3	496,32	–	38	108,0	187,0	–	187,0	–	200,0	87,50	**PHP 112-14M-170RSB**
		641,71	144	3	638,92	–	38	108,0	187,0	–	187,0	–	220,0	114,80	**PHP 144-14M-170RSB**
		748,66	168	3	745,87	–	38	108,0	187,0	–	187,0	–	220,0	125,00	**PHP 168-14M-170RSB**
		855,62	192	3	852,82	–	38	108,0	187,0	–	187,0	–	220,0	136,40	**PHP 192-14M-170RSB**
		962,57	216	3	959,76	–	38	108,0	187,0	–	187,0	–	220,0	147,00	**PHP 216-14M-170RSB**

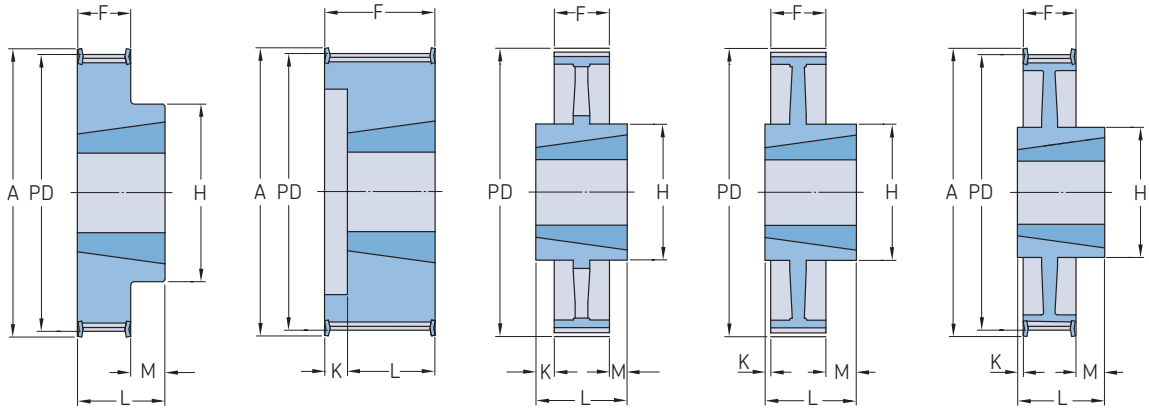

Pitch	Belt width	Pitch diameter PD	Number of teeth	Pulley type	Bushing number	Dimensions Outer diameter OD	A	B Min.	B Max.	F	K	L	M	H	Mass[1]	Designation
mm			–	–	–	mm									kg	–
5	**15**	54,11	34	3F	1008	52,97	58	9	25,0	20,5	–	22,0	1,5	43	0,19	**PHP 34-5M-15TB**
		57,30	36	3F	1108	56,16	61	9	28,0	20,5	–	22,0	1,5	45	0,20	**PHP 36-5M-15TB**
		60,48	38	3F	1108	59,34	65	9	28,0	20,5	–	22,0	1,5	48	0,25	**PHP 38-5M-15TB**
		63,66	40	3F	1108	62,52	68	9	28,0	20,5	–	22,0	1,5	52	0,31	**PHP 40-5M-15TB**
		70,03	44	3F	1108	68,89	74	9	28,0	20,5	–	22,0	1,5	54	0,40	**PHP 44-5M-15TB**
		76,39	48	3F	1210	75,25	80	11	32,0	20,5	–	25,0	4,5	64	0,45	**PHP 48-5M-15TB**
		89,13	56	3F	1210	87,99	93	11	32,0	20,5	–	25,0	4,5	70	0,67	**PHP 56-5M-15TB**
		101,86	64	3F	1210	100,72	106	11	32,0	20,5	–	25,0	4,5	78	0,96	**PHP 64-5M-15TB**
		114,59	72	3F	1610	113,45	118	14	42,0	20,5	–	25,0	4,5	90	1,19	**PHP 72-5M-15TB**
		127,32	80	3F	1610	126,18	135	14	42,0	20,5	–	25,0	4,5	92	1,57	**PHP 80-5M-15TB**
		143,24	90	10	1610	142,10	–	14	42,0	20,5	2,3	25,0	2,3	92	1,47	**PHP 90-5M-15TB**
		178,25	112	10	1610	177,11	–	14	42,0	20,5	2,3	25,0	2,3	92	1,94	**PHP 112-5M-15TB**
		216,45	136	10	2012	215,31	–	14	50,0	20,5	5,8	32,0	5,8	106	3,06	**PHP 136-5M-15TB**
		238,73	150	10	2012	237,51	–	14	50,0	20,5	5,8	32,0	5,8	106	4,50	**PHP 150-5M-15TB**
8	**20**	56,02	22	4F	1008	54,65	65	9	25,0	28,0	6,0	22,0	–	–	0,24	**PHP 22-8M-20TB**
		61,12	24	4F	1108	59,75	70	9	28,0	28,0	6,0	22,0	–	–	0,30	**PHP 24-8M-20TB**
		66,21	26	4F	1108	64,84	75	9	28,0	28,0	6,0	22,0	–	–	0,36	**PHP 26-8M-20TB**
		71,30	28	4F	1108	70,08	80	9	28,0	28,0	6,0	22,0	–	–	0,44	**PHP 28-8M-20TB**
		76,39	30	4F	1108	75,13	85	11	28,0	28,0	6,0	22,0	–	–	0,45	**PHP 30-8M-20TB**
		81,49	32	4F	1610	80,16	90	11	42,0	28,0	3,0	25,0	–	–	0,50	**PHP 32-8M-20TB**
		86,58	34	4F	1610	85,22	95	14	42,0	28,0	3,0	25,0	–	–	0,55	**PHP 34-8M-20TB**
		91,67	36	4F	1610	90,30	100	14	42,0	28,0	3,0	25,0	–	–	0,68	**PHP 36-8M-20TB**
		96,77	38	4F	1610	95,39	106	14	42,0	28,0	3,0	25,0	–	–	0,80	**PHP 38-8M-20TB**
		101,86	40	4F	1610	100,49	110	14	42,0	28,0	3,0	25,0	–	–	1,00	**PHP 40-8M-20TB**
		106,95	42	4F	1610	105,58	110	14	42,0	28,0	3,0	25,0	–	–	1,11	**PHP 42-8M-20TB**
		112,05	44	3F	2012	110,67	121	14	50,0	28,0	–	32,0	4,0	92	1,20	**PHP 44-8M-20TB**
		122,23	48	3F	2012	120,86	131	14	50,0	28,0	–	32,0	4,0	96	1,60	**PHP 48-8M-20TB**
		142,60	56	3F	2012	141,23	151	14	50,0	28,0	–	32,0	4,0	110	2,40	**PHP 56-8M-20TB**
		152,79	60	3F	2012	151,42	162	14	50,0	28,0	–	32,0	4,0	110	2,55	**PHP 60-8M-20TB**
		162,97	64	12F	2012	161,60	171	14	50,0	28,0	–	32,0	4,0	110	2,70	**PHP 64-8M-20TB**
		183,35	72	12F	2012	181,97	192	14	50,0	28,0	–	32,0	4,0	110	3,30	**PHP 72-8M-20TB**
		203,72	80	12	2012	202,35	–	16	50,0	28,0	–	32,0	4,0	110	3,50	**PHP 80-8M-20TB**
		229,18	90	12	2012	227,81	–	16	50,0	28,0	–	32,0	4,0	110	3,65	**PHP 90-8M-20TB**
8	**30**	50,93	20	4F	1008	49,56	60	9	25,0	38,0	16,0	22,0	–	–	0,23	**PHP 20-8M-30TB**
		53,47	21	4F	1008	52,10	65	9	25,0	38,0	16,0	22,0	–	–	0,26	**PHP 21-8M-30TB**
		56,02	22	4F	1008	54,65	65	9	25,0	38,0	16,0	22,0	–	–	0,29	**PHP 22-8M-30TB**
		58,57	23	4F	1108	57,20	70	9	28,0	38,0	16,0	22,0	–	–	0,32	**PHP 23-8M-30TB**
		61,12	24	4F	1108	59,75	70	9	28,0	38,0	16,0	22,0	–	–	0,38	**PHP 24-8M-30TB**
		63,66	25	4F	1108	62,29	75	9	28,0	38,0	16,0	22,0	–	–	0,41	**PHP 25-8M-30TB**
		66,21	26	4F	1108	64,84	75	9	28,0	38,0	16,0	22,0	–	–	0,45	**PHP 26-8M-30TB**
		68,75	27	4F	1108	67,38	80	9	28,0	38,0	16,0	22,0	–	–	0,49	**PHP 27-8M-30TB**
		71,30	28	4F	1210	70,08	80	11	32,0	38,0	16,0	25,0	–	–	0,50	**PHP 28-8M-30TB**

[1] Mass does not include bushings.

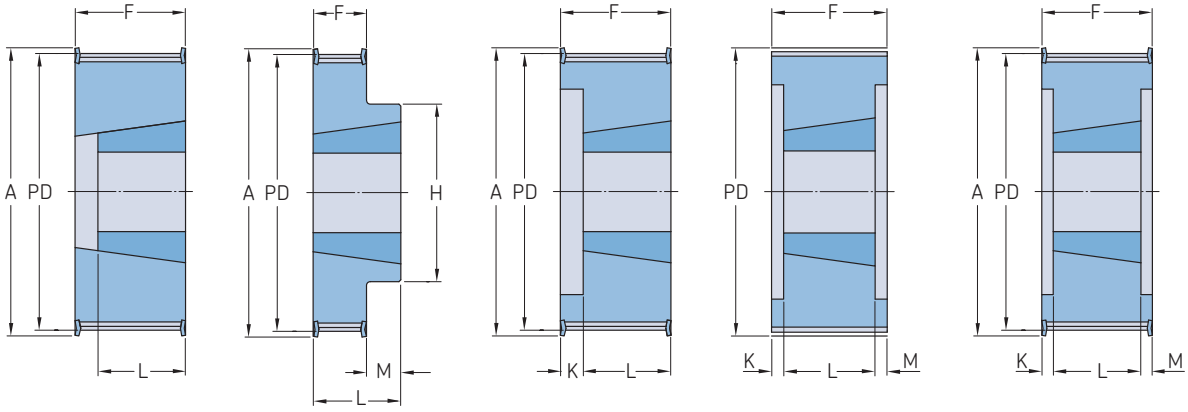

Type 2F | Type 3F | Type 4F | Type 6 | Type 6F

Pitch	Belt width	Pitch diameter PD	Number of teeth	Pulley type	Bushing number	Dimensions Outer diameter OD	A	B Min.	Max.	F	K	L	M	H	Mass[1]	Designation
mm			–	–	–	mm									kg	–
8	**30**	76,39	30	2F	1615	75,13	85	11	42,0	38,0	–	38,0	–	–	0,55	**PHP 30-8M-30TB**
		78,94	31	2F	1615	77,57	90	14	42,0	38,0	–	38,0	–	–	0,57	**PHP 31-8M-30TB**
		81,49	32	2F	1615	80,16	90	14	42,0	38,0	–	38,0	–	–	0,59	**PHP 32-8M-30TB**
		84,03	33	2F	1615	82,66	95	14	42,0	38,0	–	38,0	–	–	0,73	**PHP 33-8M-30TB**
		86,58	34	2F	1615	85,22	95	14	42,0	38,0	–	38,0	–	–	0,77	**PHP 34-8M-30TB**
		89,13	35	2F	1615	87,75	100	14	42,0	38,0	–	38,0	–	–	0,82	**PHP 35-8M-30TB**
		91,67	36	2F	1615	90,30	100	14	42,0	38,0	–	38,0	–	–	0,96	**PHP 36-8M-30TB**
		96,77	38	2F	1615	95,39	106	14	42,0	38,0	–	38,0	–	–	1,15	**PHP 38-8M-30TB**
		101,86	40	2F	1615	100,49	110	14	42,0	38,0	–	38,0	–	–	1,34	**PHP 40-8M-30TB**
		106,95	42	2F	1615	105,58	110	14	42,0	38,0	–	38,0	–	–	1,36	**PHP 42-8M-30TB**
		112,05	44	6F	2012	110,67	121	14	50,0	38,0	6,0	32,0	–	–	1,33	**PHP 44-8M-30TB**
		114,59	45	6F	2012	113,22	121	14	50,0	38,0	6,0	32,0	–	–	1,62	**PHP 45-8M-30TB**
		122,23	48	6F	2012	120,86	131	14	50,0	38,0	6,0	32,0	–	–	1,78	**PHP 48-8M-30TB**
		127,32	50	6F	2012	125,95	136	14	50,0	38,0	3,0	32,0	3,0	–	2,08	**PHP 50-8M-30TB**
		132,42	52	6F	2012	131,04	141	14	50,0	38,0	3,0	32,0	3,0	–	2,39	**PHP 52-8M-30TB**
		142,60	56	6F	2012	141,23	151	14	50,0	38,0	6,0	32,0	–	–	3,76	**PHP 56-8M-30TB**
		147,70	58	6F	2012	146,32	156	14	50,0	38,0	3,0	32,0	3,0	–	3,87	**PHP 58-8M-30TB**
		152,79	60	6F	2517	151,42	162	16	60,0	38,0	3,0	45,0	3,0	–	3,98	**PHP 60-8M-30TB**
		162,97	64	3F	2517	161,60	171	16	60,0	38,0	–	45,0	7,0	125	4,20	**PHP 64-8M-30TB**
		183,35	72	12F	2517	181,97	192	16	60,0	38,0	–	45,0	7,0	125	4,30	**PHP 72-8M-30TB**
		203,72	80	12	2517	202,35	–	16	60,0	38,0	–	45,0	7,0	125	4,60	**PHP 80-8M-30TB**
		229,18	90	12	2517	227,81	–	16	60,0	38,0	–	45,0	7,0	125	5,00	**PHP 90-8M-30TB**
		285,21	112	12	2517	283,83	–	16	60,0	38,0	–	45,0	7,0	125	6,20	**PHP 112-8M-30TB**
		366,69	144	12	2517	365,32	–	16	60,0	38,0	–	45,0	7,0	125	9,00	**PHP 144-8M-30TB**
		427,81	168	10	3020	426,44	–	25	75,0	38,0	7,0	51,0	7,0	170	15,00	**PHP 168-8M-30TB**
		488,92	192	10	3525	487,55	–	35	100,0	38,0	14,0	65,0	7,0	198	18,50	**PHP 192-8M-30TB**

[1] Mass does not include bushings.

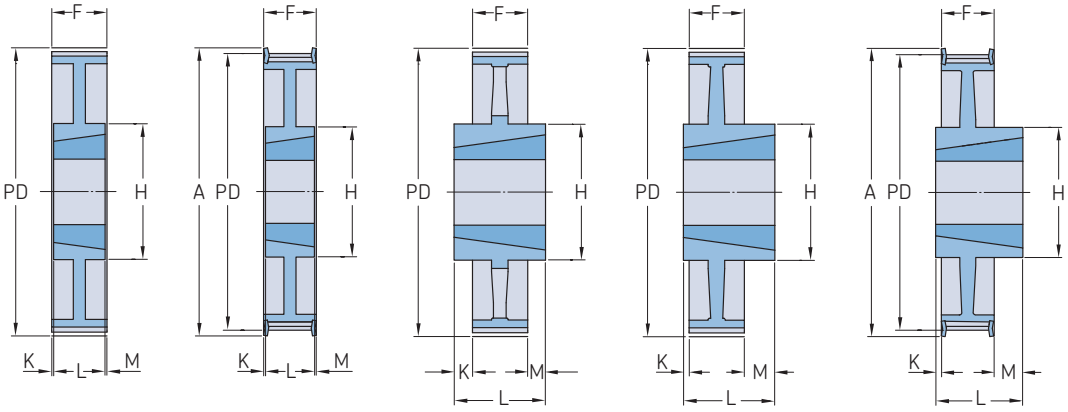

Type 7 Type 7F Type 10 Type 12 Type 12F

Pitch	Belt width	Pitch diameter PD	Number of teeth	Pulley type	Bushing number	Dimensions Outer diameter OD	A	B Min.	B Max.	F	K	L	M	H	Mass[1]	Designation
mm			–	–	–	mm									kg	–
8	**50**	61,12	24	6F	1108	59,75	70	9	32,0	60,0	19,0	22,0	19,0	–	0,35	**PHP 24-8M-50TB**
		66,21	26	6F	1108	64,84	75	9	32,0	60,0	19,0	22,0	19,0	–	0,48	**PHP 26-8M-50TB**
		68,75	27	6F	1108	67,38	75	9	32,0	60,0	19,0	22,0	19,0	–	0,55	**PHP 27-8M-50TB**
		71,30	28	4F	1210	70,08	80	11	32,0	60,0	35,0	22,0	35,0	–	0,60	**PHP 28-8M-50TB**
		76,39	30	4F	1615	75,13	85	14	42,0	60,0	23,0	25,0	–	–	0,65	**PHP 30-8M-50TB**
		78,94	31	4F	1615	77,57	87	14	42,0	60,0	23,0	25,0	–	–	0,77	**PHP 31-8M-50TB**
		81,49	32	4F	1615	80,16	90	14	42,0	60,0	23,0	25,0	–	–	0,82	**PHP 32-8M-50TB**
		84,03	33	4F	1615	82,66	90	14	42,0	60,0	23,0	25,0	–	–	0,98	**PHP 33-8M-50TB**
		86,58	34	4F	1615	85,22	95	14	42,0	60,0	23,0	25,0	–	–	1,06	**PHP 34-8M-50TB**
		89,13	35	4F	1615	87,75	95	14	42,0	60,0	23,0	25,0	–	–	1,18	**PHP 35-8M-50TB**
		91,67	36	4F	1615	90,30	100	14	42,0	60,0	23,0	25,0	–	–	1,30	**PHP 36-8M-50TB**
		96,77	38	4F	1615	95,39	105	14	42,0	60,0	23,0	25,0	–	–	1,60	**PHP 38-8M-50TB**
		101,86	40	4F	2012	100,49	110	14	50,0	60,0	29,0	32,0	–	–	1,71	**PHP 40-8M-50TB**
		106,95	42	4F	2012	105,58	111	14	50,0	60,0	29,0	32,0	28,0	–	1,75	**PHP 42-8M-50TB**
		112,05	44	6F	2012	110,67	121	14	50,0	60,0	–	32,0	28,0	–	1,78	**PHP 44-8M-50TB**
		114,59	45	6F	2012	113,22	121	14	50,0	60,0	–	32,0	28,0	–	1,91	**PHP 45-8M-50TB**
		122,23	48	6F	2012	120,86	131	14	50,0	60,0	–	32,0	28,0	–	2,30	**PHP 48-8M-50TB**
		127,32	50	6F	2012	125,95	131	14	50,0	60,0	–	32,0	28,0	–	2,58	**PHP 50-8M-50TB**
		132,42	52	6F	2012	131,04	140	14	50,0	60,0	–	32,0	28,0	–	2,85	**PHP 52-8M-50TB**
		142,60	56	6F	2517	141,23	151	16	60,0	60,0	–	45,0	15,0	–	3,40	**PHP 56-8M-50TB**
		147,70	58	6F	2517	146,32	156	16	60,0	60,0	–	45,0	15,0	–	3,80	**PHP 58-8M-50TB**
		152,79	60	6F	2517	151,42	158	16	60,0	60,0	–	45,0	15,0	–	4,20	**PHP 60-8M-50TB**
		162,97	64	6F	2517	161,60	171	16	60,0	60,0	–	45,0	15,0	–	5,00	**PHP 64-8M-50TB**
		183,35	72	7F	2517	181,97	192	16	60,0	60,0	7,5	45,0	7,5	125	6,70	**PHP 72-8M-50TB**
		203,72	80	6	3020	202,35	–	25	75,0	60,0	4,5	45,0	4,5	–	8,80	**PHP 80-8M-50TB**
		229,18	90	7	3020	227,81	–	25	75,0	60,0	4,5	51,0	4,5	160	10,00	**PHP 90-8M-50TB**
		285,21	112	7	3020	283,83	–	25	75,0	60,0	4,5	51,0	4,5	170	12,00	**PHP 112-8M-50TB**

[1] Mass does not include bushings.

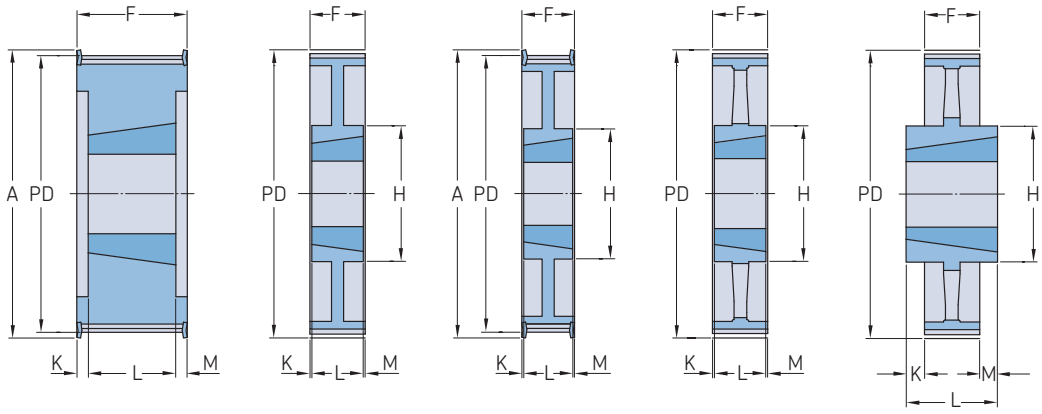

Type 6F | Type 7 | Type 7F | Type 8 | Type 10

Pitch	Belt width	Pitch diameter PD	Number of teeth	Pulley type	Bushing number	Dimensions Outer diameter OD	A	B Min.	B Max.	F	K	L	M	H	Mass[1]	Designation
mm			–	–	–	mm									kg	–
8	**50**	366,69	144	8	3020	365,32	–	25	75,0	60,0	4,5	51,0	4,5	170	15,20	**PHP 144-8M-50TB**
		427,81	168	10	3525	426,44	–	25	100,0	60,0	4,5	51,0	4,5	170	16,40	**PHP 168-8M-50TB**
		488,92	192	10	3525	487,55	–	25	100,0	60,0	4,5	51,0	4,5	170	21,80	**PHP 192-8M-50TB**
8	**85**	61,12	24	6F	1108	59,75	70	9	28,0	95,0	36,5	22,0	36,5	–	0,46	**PHP 24-8M-85TB**
		66,21	26	6F	1108	64,84	75	9	28,0	95,0	36,5	22,0	36,5	–	0,64	**PHP 26-8M-85TB**
		71,30	28	6F	1108	70,08	80	9	28,0	95,0	36,5	22,0	36,5	–	0,82	**PHP 28-8M-85TB**
		76,39	30	6F	1615	75,13	85	14	42,0	95,0	36,5	22,0	36,5	–	1,17	**PHP 30-8M-85TB**
		84,03	33	6F	1615	82,66	90	14	42,0	95,0	36,5	22,0	36,5	–	1,34	**PHP 33-8M-85TB**
		86,58	34	6F	1615	85,22	95	14	42,0	95,0	28,5	38,0	28,5	–	1,43	**PHP 34-8M-85TB**
		89,13	35	6F	1615	87,75	95	14	42,0	95,0	28,5	38,0	28,5	–	1,54	**PHP 35-8M-85TB**
		91,67	36	6F	1615	90,30	100	14	42,0	95,0	28,5	38,0	28,5	–	1,87	**PHP 36-8M-85TB**
		96,77	38	6F	1615	95,39	106	14	42,0	95,0	28,5	38,0	28,5	–	2,20	**PHP 38-8M-85TB**
		101,86	40	6F	2012	100,49	110	14	50,0	95,0	31,5	32,0	31,5	–	1,80	**PHP 40-8M-85TB**
		106,95	42	6F	2012	105,58	110	14	50,0	95,0	31,5	32,0	31,5	–	2,16	**PHP 42-8M-85TB**
		112,05	44	6F	2012	110,67	121	14	50,0	95,0	31,5	32,0	31,5	–	2,30	**PHP 44-8M-85TB**
		114,59	45	6F	2012	113,22	121	14	50,0	95,0	31,5	32,0	31,5	–	2,39	**PHP 45-8M-85TB**
		122,23	48	6F	2517	120,86	131	16	60,0	95,0	25,0	45,0	25,0	–	2,66	**PHP 48-8M-85TB**
		127,32	50	6F	2517	125,95	131	16	60,0	95,0	25,0	45,0	25,0	–	3,11	**PHP 50-8M-85TB**
		132,42	52	6F	2517	131,04	140	16	60,0	95,0	25,0	45,0	25,0	–	3,56	**PHP 52-8M-85TB**
		142,60	56	6F	2517	141,23	151	16	60,0	95,0	25,0	45,0	25,0	–	4,45	**PHP 56-8M-85TB**
		147,70	58	6F	2517	146,32	158	16	60,0	95,0	25,0	45,0	25,0	–	4,89	**PHP 58-8M-85TB**
		152,79	60	6F	2517	151,42	158	16	60,0	95,0	25,0	45,0	25,0	–	5,33	**PHP 60-8M-85TB**
		162,97	64	7F	2517	161,60	171	16	60,0	95,0	25,0	45,0	25,0	–	6,20	**PHP 64-8M-85TB**
		183,35	72	7	3020	181,97	192	25	75,0	95,0	22,0	51,0	22,0	–	8,00	**PHP 72-8M-85TB**
		203,72	80	8	3020	202,35	–	25	75,0	95,0	22,0	51,0	22,0	–	10,00	**PHP 80-8M-85TB**
		229,18	90	8	3020	227,81	–	25	75,0	95,0	22,0	51,0	22,0	–	10,80	**PHP 90-8M-85TB**
		285,21	112	8	3020	283,83	–	25	75,0	95,0	22,0	51,0	22,0	170	15,00	**PHP 112-8M-85TB**
		366,69	144	8	3535	365,32	–	35	90,0	95,0	3,0	89,0	3,0	190	20,00	**PHP 144-8M-85TB**
		427,81	168	8	3535	426,44	–	35	90,0	95,0	3,0	89,0	3,0	190	23,00	**PHP 168-8M-85TB**
		488,92	192	8	3535	487,55	–	35	90,0	95,0	3,0	89,0	3,0	190	28,50	**PHP 192-8M-85TB**
14	**40**	124,78	28	6F	2012	122,12	141	14	50,0	54,0	11,0	32,0	11,0	–	2,66	**PHP 28-14M-40TB**
		129,23	29	6F	2012	126,57	141	14	50,0	54,0	11,0	32,0	11,0	–	2,66	**PHP 29-14M-40TB**
		133,69	30	6F	2012	130,99	156	14	50,0	54,0	11,0	32,0	11,0	–	2,89	**PHP 30-14M-40TB**
		142,60	32	6F	2012	139,88	156	14	50,0	54,0	11,0	32,0	11,0	–	3,51	**PHP 32-14M-40TB**
		151,52	34	6F	2517	148,79	165	16	60,0	54,0	4,5	45,0	4,5	–	3,87	**PHP 34-14M-40TB**
		155,97	35	6F	2517	153,18	173	16	60,0	54,0	4,5	45,0	4,5	–	4,34	**PHP 35-14M-40TB**
		160,43	36	6F	2517	157,68	173	16	60,0	54,0	4,5	45,0	4,5	–	4,62	**PHP 36-14M-40TB**
		169,34	38	6F	2517	166,60	182	16	60,0	54,0	4,5	45,0	4,5	–	5,40	**PHP 38-14M-40TB**
		178,25	40	6F	2517	175,49	191	16	60,0	54,0	4,5	45,0	4,5	–	6,23	**PHP 40-14M-40TB**
		187,17	42	6F	2517	184,37	209	16	60,0	54,0	4,5	45,0	4,5	–	6,75	**PHP 42-14M-40TB**
		196,08	44	6F	3020	193,28	209	25	75,0	54,0	1,5	51,0	1,5	–	7,26	**PHP 44-14M-40TB**
		200,54	45	6F	3020	197,74	227	25	75,0	54,0	1,5	51,0	1,5	–	8,20	**PHP 45-14M-40TB**
		213,90	48	6F	3020	211,11	227	25	75,0	54,0	1,5	51,0	1,5	–	9,33	**PHP 48-14M-40TB**
		222,82	50	6F	3020	220,02	246	25	75,0	54,0	1,5	51,0	1,5	–	10,10	**PHP 50-14M-40TB**
		249,55	56	6F	3020	246,76	264	25	75,0	54,0	1,5	51,0	1,5	–	10,80	**PHP 56-14M-40TB**
		267,38	60	7F	3020	264,59	281	25	75,0	54,0	1,5	51,0	1,5	170	13,10	**PHP 60-14M-40TB**
		285,21	64	7F	3020	282,41	296	25	75,0	54,0	1,5	51,0	1,5	170	15,40	**PHP 64-14M-40TB**
		320,86	72	7	3020	318,06	–	25	75,0	54,0	1,5	51,0	1,5	170	19,75	**PHP 72-14M-40TB**
		356,51	80	8	3020	353,71	–	25	75,0	54,0	1,5	51,0	1,5	170	20,00	**PHP 80-14M-40TB**
		401,07	90	8	3020	398,28	–	25	75,0	54,0	1,5	51,0	1,5	170	21,80	**PHP 90-14M-40TB**
		499,11	112	8	3020	496,32	–	25	75,0	54,0	1,5	51,0	1,5	170	29,60	**PHP 112-14M-40TB**
		641,71	144	8	3020	638,92	–	25	75,0	54,0	1,5	51,0	1,5	170	36,00	**PHP 144-14M-40TB**
		748,66	168	8	3020	745,87	–	25	75,0	54,0	1,5	51,0	1,5	170	48,00	**PHP 168-14M-40TB**

[1] Mass does not include bushings.

Pitch	Belt width	Pitch diameter PD	Number of teeth	Pulley type	Bushing number	Dimensions Outer diameter OD	A	B Min.	Max.	F	K	L	M	H	Mass[1]	Designation
mm			–	–	–	mm									kg	–
14	**40**	855,62	192	8	3020	852,82	–	25	75,0	54,0	1,5	51,0	1,5	170	53,00	**PHP 192-14M-40TB**
		962,56	216	8	3020	960,00	–	25	75,0	54,0	1,5	51,0	1,5	170	60,00	**PHP 216-14M-40TB**
14	**55**	124,78	28	6F	2012	122,12	141	14	50,0	70,0	19,0	32,0	19,0	–	2,88	**PHP 28-14M-55TB**
		129,23	29	6F	2012	126,57	141	14	50,0	70,0	19,0	32,0	19,0	–	3,18	**PHP 29-14M-55TB**
		133,69	30	6F	2517	130,99	156	16	60,0	70,0	12,5	45,0	12,5	–	3,21	**PHP 30-14M-55TB**
		142,60	32	6F	2517	139,88	156	16	60,0	70,0	12,5	45,0	12,5	–	3,90	**PHP 32-14M-55TB**
		151,51	34	6F	2517	148,79	165	16	60,0	70,0	12,5	45,0	12,5	–	4,55	**PHP 34-14M-55TB**
		155,97	35	6F	2517	153,18	173	16	60,0	70,0	12,5	45,0	12,5	–	4,88	**PHP 35-14M-55TB**
		160,43	36	6F	2517	157,68	173	16	60,0	70,0	12,5	45,0	12,5	–	5,20	**PHP 36-14M-55TB**
		169,34	38	6F	2517	166,60	182	16	60,0	70,0	12,5	45,0	12,5	–	6,20	**PHP 38-14M-55TB**
		178,25	40	6F	2517	175,49	191	16	60,0	70,0	12,5	45,0	12,5	–	7,00	**PHP 40-14M-55TB**
		187,17	42	6F	3020	184,37	209	25	75,0	70,0	9,5	51,0	9,5	–	7,80	**PHP 42-14M-55TB**
		196,08	44	6F	3020	193,28	209	25	75,0	70,0	9,5	51,0	9,5	–	8,42	**PHP 44-14M-55TB**
		200,54	45	6F	3020	197,74	227	25	75,0	70,0	9,5	51,0	9,5	–	9,51	**PHP 45-14M-55TB**
		213,90	48	6F	3020	211,11	227	25	75,0	70,0	9,5	51,0	9,5	–	10,64	**PHP 48-14M-55TB**
		228,82	50	6F	3020	220,02	246	25	75,0	70,0	9,5	51,0	9,5	–	11,52	**PHP 50-14M-55TB**
		249,55	56	6F	3020	246,76	264	25	75,0	70,0	9,5	51,0	9,5	–	12,40	**PHP 56-14M-55TB**
		267,38	60	7F	3020	264,59	281	25	75,0	70,0	9,5	51,0	9,5	170	14,00	**PHP 60-14M-55TB**
		285,21	64	7F	3020	282,41	298	25	75,0	70,0	9,5	51,0	9,5	170	15,18	**PHP 64-14M-55TB**
		320,86	72	7	3020	318,06	–	25	75,0	70,0	9,5	51,0	9,5	170	20,00	**PHP 72-14M-55TB**
		356,51	80	8	3020	353,71	–	25	75,0	70,0	9,5	51,0	9,5	170	22,50	**PHP 80-14M-55TB**
		401,07	90	8	3020	398,28	–	25	75,0	70,0	9,5	51,0	9,5	170	25,00	**PHP 90-14M-55TB**
		499,11	112	8	3020	496,32	–	25	75,0	70,0	9,5	51,0	9,5	170	33,40	**PHP 112-14M-55TB**
		641,71	144	8	3020	638,92	–	25	75,0	70,0	9,5	51,0	9,5	170	46,50	**PHP 144-14M-55TB**
		748,66	168	8	3020	745,87	–	25	75,0	70,0	9,5	51,0	9,5	170	58,50	**PHP 168-14M-55TB**
		855,62	192	8	3020	852,82	–	25	75,0	70,0	9,5	51,0	9,5	170	62,00	**PHP 192-14M-55TB**
		962,56	216	10	3535	960,00	–	35	90,0	70,0	9,5	51,0	9,5	190	74,80	**PHP 216-14M-55TB**
14	**85**	124,78	28	6F	2517	122,12	141	16	60,0	102,0	28,5	45,0	28,5	–	2,70	**PHP 28-14M-85TB**
		129,23	29	6F	2517	126,57	141	16	60,0	102,0	28,5	45,0	28,5	–	3,40	**PHP 29-14M-85TB**
		133,69	30	6F	2517	130,99	156	16	60,0	102,0	28,5	45,0	28,5	–	3,75	**PHP 30-14M-85TB**
		142,60	32	6F	2517	139,88	156	16	60,0	102,0	28,5	45,0	28,5	–	4,80	**PHP 32-14M-85TB**
		151,51	34	6F	2517	148,79	165	16	60,0	102,0	28,5	45,0	28,5	–	6,00	**PHP 34-14M-85TB**
		155,97	35	6F	2517	153,18	173	16	75,0	102,0	25,5	51,0	25,5	–	6,33	**PHP 35-14M-85TB**
		160,43	36	6F	3020	157,68	173	25	75,0	102,0	25,5	51,0	25,5	–	6,67	**PHP 36-14M-85TB**
		169,34	38	6F	3020	166,60	182	25	75,0	102,0	25,5	51,0	25,5	–	6,80	**PHP 38-14M-85TB**
		178,25	40	6F	3020	175,49	191	25	75,0	102,0	25,5	51,0	25,5	–	8,00	**PHP 40-14M-85TB**
		181,17	42	6F	3020	184,37	209	25	75,0	102,0	13,0	76,0	13,0	–	9,90	**PHP 42-14M-85TB**
		196,08	44	6F	3020	193,28	209	25	75,0	102,0	13,0	76,0	13,0	–	11,80	**PHP 44-14M-85TB**
		200,54	45	6F	3020	197,74	227	25	75,0	102,0	13,0	76,0	13,0	–	12,63	**PHP 45-14M-85TB**
		213,90	48	6F	3020	211,11	227	25	75,0	102,0	13,0	76,0	13,0	–	15,10	**PHP 48-14M-85TB**
		222,82	50	6F	3535	220,02	246	35	90,0	102,0	18,5	65,0	18,5	–	16,08	**PHP 50-14M-85TB**
		249,55	56	6F	3535	246,76	264	35	90,0	102,0	18,5	65,0	18,5	–	19,00	**PHP 56-14M-85TB**
		267,38	60	6F	3535	264,59	281	35	90,0	102,0	18,5	65,0	18,5	–	21,00	**PHP 60-14M-85TB**
		285,21	64	7F	3535	282,41	298	35	90,0	102,0	18,5	65,0	18,5	190	23,00	**PHP 64-14M-85TB**
		320,86	72	7	3535	318,06	–	35	90,0	102,0	18,5	65,0	18,5	190	25,00	**PHP 72-14M-85TB**
		356,51	80	8	3535	353,71	–	35	90,0	102,0	18,5	65,0	18,5	190	26,00	**PHP 80-14M-85TB**
		401,07	90	8	3535	398,28	–	35	90,0	102,0	18,5	65,0	18,5	190	27,80	**PHP 90-14M-85TB**
		499,11	112	8	3535	496,32	–	35	90,0	102,0	18,5	65,0	18,5	190	36,50	**PHP 112-14M-85TB**
		641,71	144	8	4040	638,92	–	40	100,0	102,0	18,5	65,0	18,5	230	48,00	**PHP 144-14M-85TB**
		748,66	168	8	4040	745,87	–	40	100,0	102,0	18,5	65,0	18,5	230	60,00	**PHP 168-14M-85TB**
		855,62	192	8	4040	852,82	–	40	100,0	102,0	–	102,0	–	230	86,00	**PHP 192-14M-85TB**
		962,56	216	8	4040	960,00	–	40	100,0	102,0	–	102,0	–	230	119,50	**PHP 216-14M-85TB**
14	**115**	124,78	28	6F	2517	122,12	141	16	60,0	133,0	44,0	45,0	44,0	–	3,77	**PHP 28-14M-115TB**
		129,23	29	6F	2517	126,57	141	16	60,0	133,0	44,0	45,0	44,0	–	4,00	**PHP 29-14M-115TB**
		133,69	30	6F	2517	130,99	156	16	60,0	133,0	44,0	45,0	44,0	–	5,00	**PHP 30-14M-115TB**
		142,60	32	6F	2517	139,88	156	16	60,0	133,0	44,0	45,0	44,0	–	6,00	**PHP 32-14M-115TB**
		151,52	34	6F	2517	148,79	165	16	60,0	133,0	44,0	45,0	44,0	–	7,20	**PHP 34-14M-115TB**
		155,97	35	6F	3020	153,18	173	25	75,0	133,0	41,0	51,0	41,0	–	7,00	**PHP 35-14M-115TB**
		160,43	36	6F	3020	157,68	173	25	75,0	133,0	41,0	51,0	41,0	–	7,30	**PHP 36-14M-115TB**
		169,34	38	6F	3020	166,60	182	25	75,0	133,0	41,0	51,0	41,0	–	8,40	**PHP 38-14M-115TB**
		178,25	40	6F	3020	175,49	191	25	75,0	133,0	41,0	51,0	41,0	–	9,20	**PHP 40-14M-115TB**
		187,17	42	6F	3030	184,37	209	35	75,0	133,0	28,5	76,0	28,5	–	11,60	**PHP 42-14M-115TB**
		196,08	44	6F	3030	193,28	209	35	75,0	133,0	28,5	76,0	28,5	–	14,00	**PHP 44-14M-115TB**
		200,54	45	6F	3030	197,74	227	35	75,0	133,0	28,5	76,0	28,5	–	15,60	**PHP 45-14M-115TB**
		213,90	48	6F	3030	211,11	227	35	75,0	133,0	28,5	76,0	28,5	–	17,10	**PHP 48-14M-115TB**
		222,82	50	6F	3535	220,02	246	35	90,0	133,0	22,0	89,0	22,0	–	21,00	**PHP 50-14M-115TB**
		249,55	56	6F	3535	246,76	264	35	90,0	133,0	22,0	89,0	22,0	–	24,80	**PHP 56-14M-115TB**
		267,38	60	6F	3535	264,59	281	35	90,0	133,0	22,0	89,0	22,0	–	25,90	**PHP 60-14M-115TB**
		285,21	64	7F	3535	282,41	298	35	90,0	133,0	22,0	89,0	22,0	190	27,00	**PHP 64-14M-115TB**
		320,86	72	7	3535	318,06	–	35	90,0	133,0	22,0	89,0	22,0	190	33,00	**PHP 72-14M-115TB**
		356,51	80	7	3535	353,71	–	35	90,0	133,0	22,0	89,0	22,0	190	37,00	**PHP 80-14M-115TB**
		401,07	90	7	3535	398,28	–	35	90,0	133,0	22,0	89,0	22,0	190	42,00	**PHP 90-14M-115TB**
		499,11	112	8	3535	496,32	–	35	90,0	133,0	22,0	89,0	22,0	190	56,00	**PHP 112-14M-115TB**

[1] Mass does not include bushings.

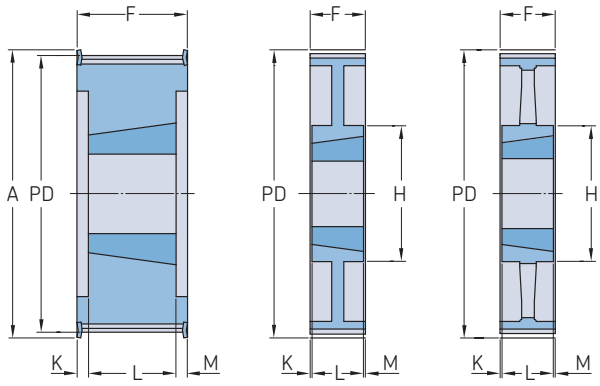

Type 6F Type 7 Type 8

Pitch	Belt width	Pitch diameter	Number of teeth	Pulley type	Bushing number	Dimensions Outer diameter									Mass[1]	Designation
		PD				OD	A	B Min.	Max.	F	K	L	M	H		
mm			–	–	–	mm									kg	–
14	**115**	641,71	144	8	4040	638,92	–	40	100,0	133,0	15,5	102,0	15,5	230	75,00	**PHP 144-14M-115TB**
		748,66	168	8	4040	745,87	–	40	100,0	133,0	15,5	102,0	15,5	230	92,60	**PHP 168-14M-115TB**
		855,62	192	8	4040	852,92	–	40	100,0	133,0	15,5	102,0	15,5	230	230,00	**PHP 192-14M-115TB**
		962,57	216	8	4040	959,76	–	40	100,0	133,0	15,5	102,0	15,5	230	127,00	**PHP 216-14M-115TB**
14	**170**	155,97	35	6F	3030	153,18	173	35	75,0	187,0	55,5	76,0	55,5	–	10,60	**PHP 35-14M-170TB**
		160,43	36	6F	3030	157,68	173	35	75,0	187,0	55,5	76,0	55,5	–	11,20	**PHP 36-14M-170TB**
		169,34	38	6F	3030	167,00	182	35	75,0	187,0	55,5	76,0	55,5	–	11,70	**PHP 38-14M-170TB**
		178,25	40	6F	3030	175,00	191	35	75,0	187,0	55,5	76,0	55,5	–	13,00	**PHP 40-14M-170TB**
		187,17	42	6F	3535	184,37	202	35	90,0	187,0	49,0	89,0	49,0	–	14,00	**PHP 42-14M-170TB**
		196,08	44	6F	3535	193,00	209	35	90,0	187,0	49,0	89,0	49,0	–	15,00	**PHP 44-14M-170TB**
		200,54	45	6F	3535	197,74	212	35	90,0	187,0	49,0	89,0	49,0	–	16,00	**PHP 45-14M-170TB**
		213,90	48	6F	3535	211,00	227	35	90,0	187,0	49,0	89,0	49,0	–	19,00	**PHP 48-14M-170TB**
		222,82	50	6F	3535	220,02	246	35	90,0	187,0	49,0	89,0	49,0	–	23,80	**PHP 50-14M-170TB**
		249,55	56	6F	3535	247,00	263	35	90,0	187,0	49,0	89,0	49,0	–	28,50	**PHP 56-14M-170TB**
		267,38	60	6F	4040	264,59	281	40	100,0	187,0	42,5	114,0	42,5	–	34,80	**PHP 60-14M-170TB**
		285,21	64	6F	4040	282,00	298	40	100,0	187,0	42,5	114,0	42,5	230	41,00	**PHP 64-14M-170TB**
		320,86	72	7	4040	318,00	–	40	100,0	187,0	42,5	114,0	42,5	230	46,90	**PHP 72-14M-170TB**
		356,51	80	7	4040	354,00	–	40	100,0	187,0	42,5	114,0	42,5	230	48,00	**PHP 80-14M-170TB**
		401,07	90	7	4040	398,00	–	40	100,0	187,0	42,5	114,0	42,5	230	52,50	**PHP 90-14M-170TB**
		499,11	112	7	5050	496,00	–	70	125,0	187,0	30,0	127,0	30,0	242	74,50	**PHP 112-14M-170TB**
		641,71	144	8	5050	639,00	–	70	125,0	187,0	30,0	127,0	30,0	394	91,00	**PHP 144-14M-170TB**
		748,86	168	8	5050	746,00	–	70	125,0	187,0	30,0	127,0	30,0	394	116,00	**PHP 168-14M-170TB**
		855,62	192	8	5050	853,00	–	70	125,0	187,0	30,0	127,0	30,0	394	134,00	**PHP 192-14M-170TB**
		962,57	216	8	5050	960,00	–	70	125,0	187,0	30,0	127,0	30,0	394	146,50	**PHP 216-14M-170TB**

[1] Mass does not include bushings.